JENKINSON ELECTRONICS
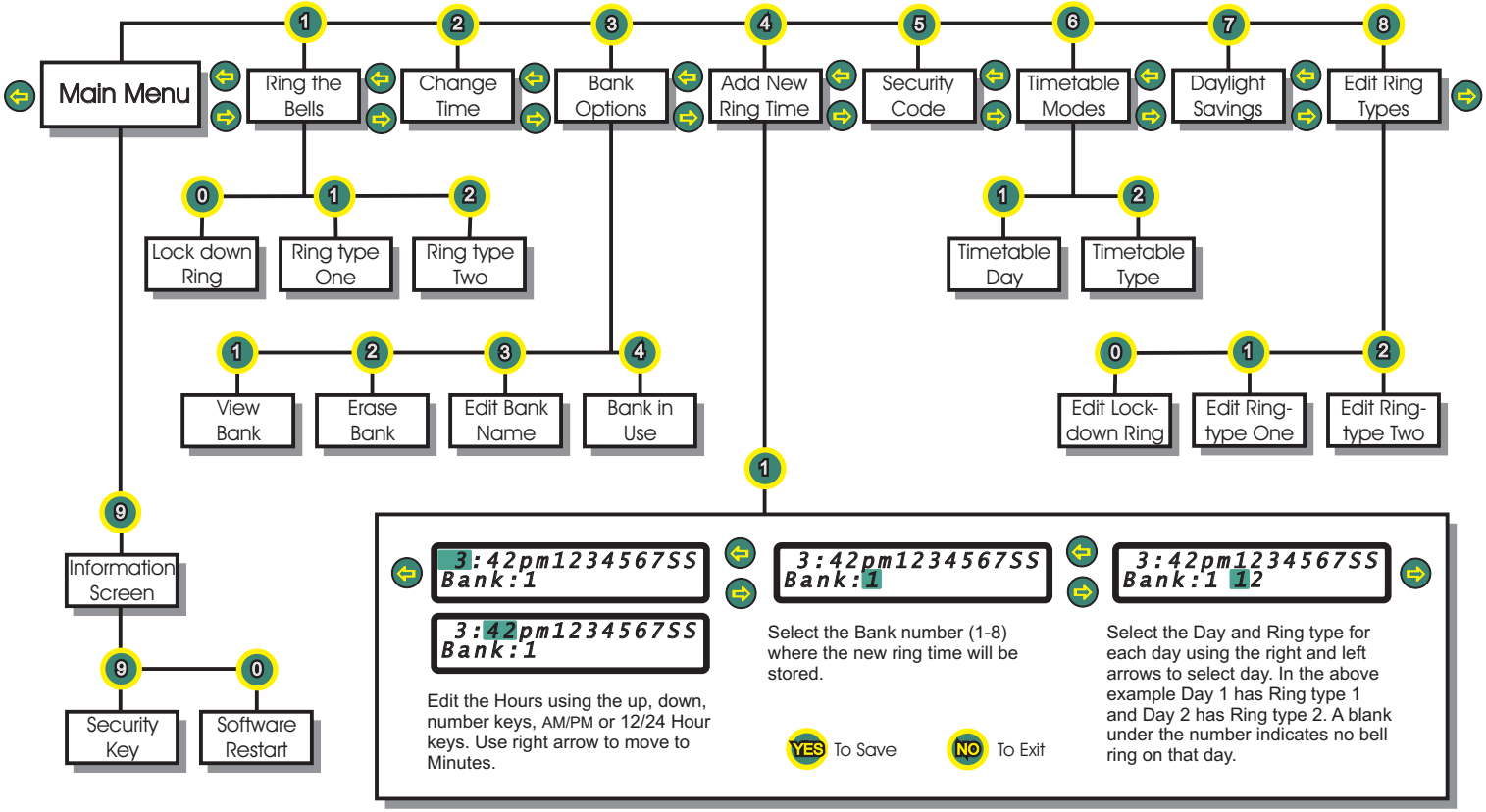
JE81CL - Quick Reference Guide